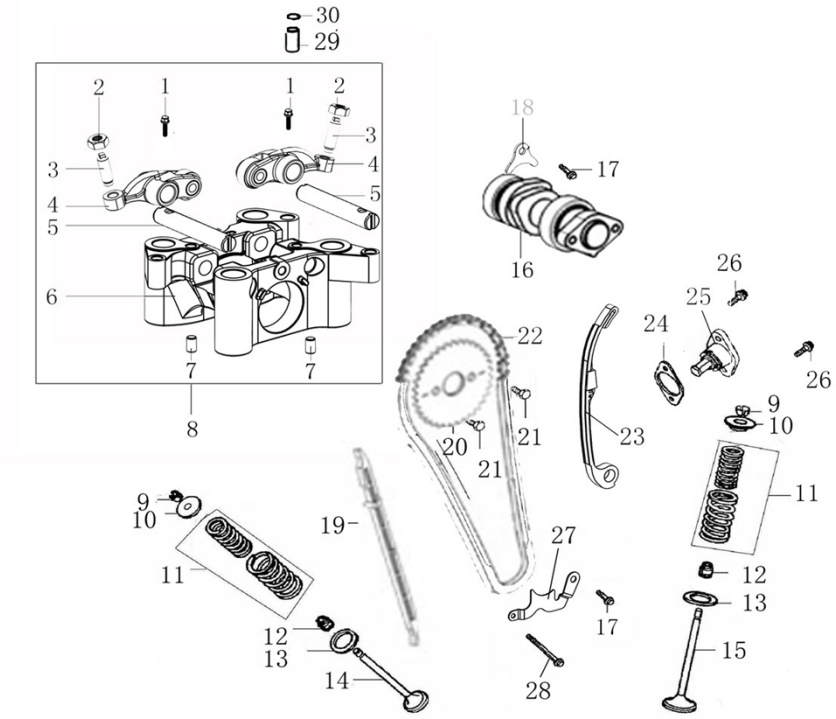

E01 = AIR INLET EXHAUST SYSTEM

ERP	Part #	ZS NEW PART#	ZS OLD PART#	Description	Quantity
2	3012114	100105158	15403-I006-0000	NUT,VALVE CLEARANCE	2
3	3012115	100105168	15404-I006-0000	SCREW, VALVE CLEARANCE	2
4	3012116	100066671		ROCKER ARM PARTS	2
5	3012117	100200371	15402-JG03-0000	ROCKER SHAFT	2
8	3012109	100105183	1540A-JG03-0000	ROCKER ARM ASSEMBLY, VALVE	1
9	3012118	100105320	15707-D002-0000	VALVE LOCKER	4
10	3012119	100200691	15705-JG03-0000	SPRING,SEAT	2
11	3012110	100200726	15710-JG03-0000	INNER SPRING,ASSY	2
12	3012120	100062531	1572B-D002-0003	OIL SEAL (KOK)	2
13	3012121	100200702	15706-JG03-0000	OUTER VALVE SPRING,RETAINER	2
14	3012111	100108485	15702-IH26-0000	EXHAUST VALUE	1
15	3012112	100108482	15701-IH26-0000	INTAKE VALVE	1
16	3012113	100200182		GAMP SHAFT COMP	1
18	3012122	100053423	15108-JG03-0000	STOP PLATE, CAMSHAFT	1
19	3020043	100200498	1553A-JG03-0000	GUIDE PLATE CHAIN	1
20	3012123	100072152		TIMING DRIVEN SPROCKET	1
22	3020040	100105099	1532B-I047-0100	SPROKET CHAIN	1
23	3020041	100200474	1552A-JG03-0000	TENSION PLATE ASSY	1
24	3160109	100208744	90211-JG03-0000	GASKET,TENSIONER	1
25	3020056	100200522-0004	1554B-JG03-00006U	CHAIN TENSIONING WHEEL MATT BLACK	1
27	3020044	100202745	2143B-JG03-0000	ASSEMBLY, CHAIN PROTECT PLATE	1

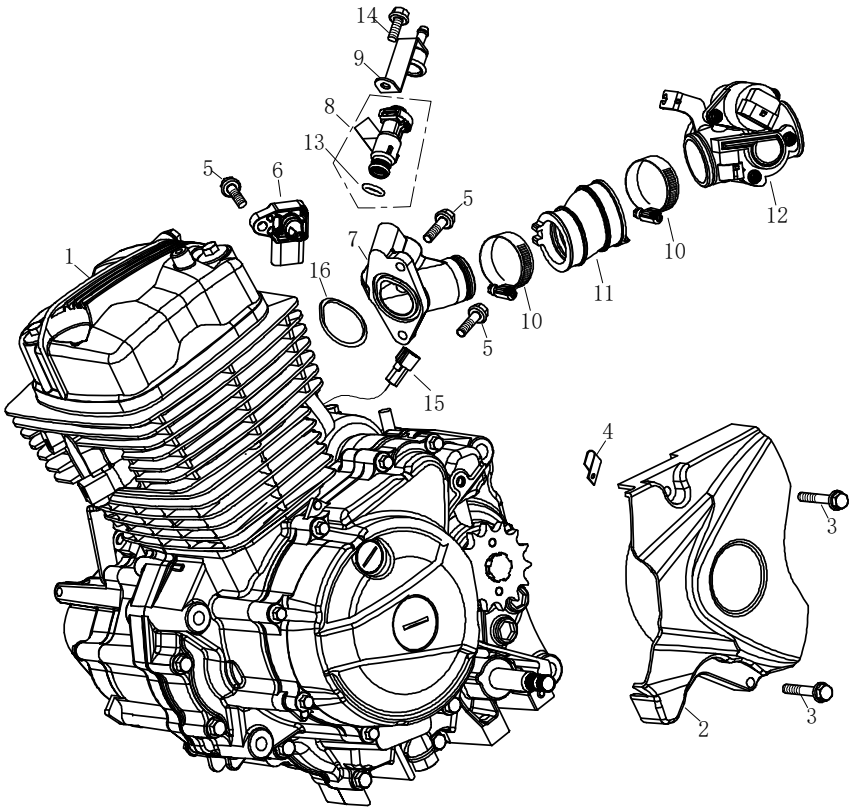

E02 = ENGINE

ITEM	Part #	ZS NEW PART#	ZS OLD PART#	Description	Quantity
1	3180092			125CC ENGINE ASSY (EFI)	1
2	3060045	9A-12302		ENGINE SPROCKET COVER MATT BLACK	1
3	3220029			BOLT M6×32	2
4	3429544			CLIP	1
5	3220010			BOLT M6×16	3
6	3158043	28356282		TEMPERATURE SENSOR	1
7	3150028			INTAKE HOSE	1
8	3158005	25360034		FUEL INJECTOR	1
9	3158044			FUEL INJECTOR CAP	1
10	3158051			CLIP,INTAKE HOSE	2
11	3158045	9A-22110-11		CONNECTER TUBE	1
12	3158041	9A-22110		THROTTLE VALVE	1
13	3210042			O-RING Φ10×2.5	1
14	3220005			BOLT M6×12	1
15	3158053			CYLINDER TEMPERATURE SENSOR	1
16	3158050			O-RING, INLET PIPE	1

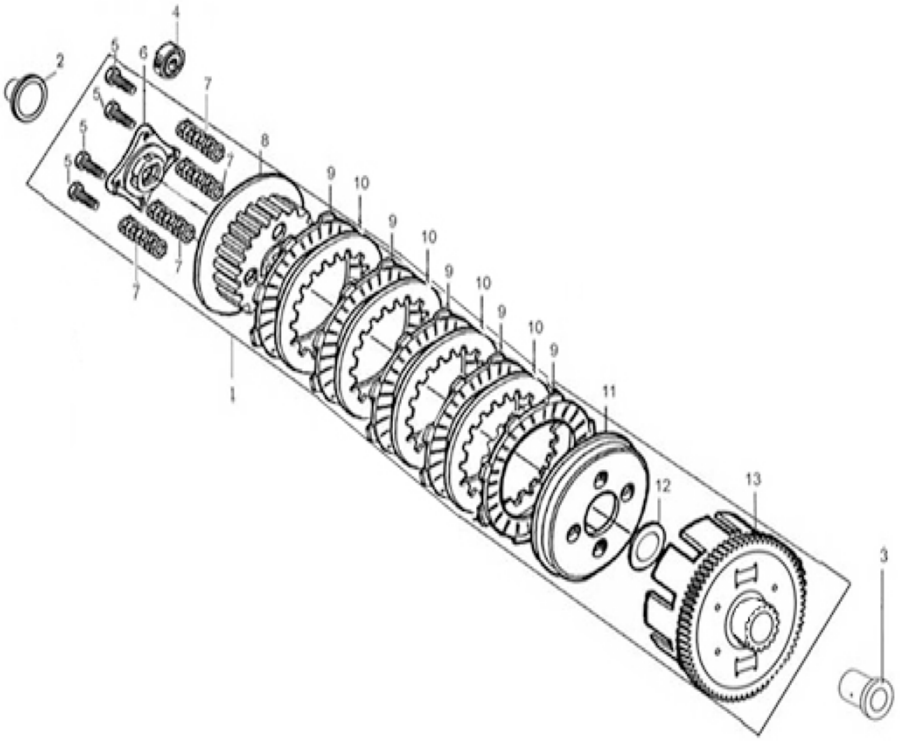

E03 = CLUTCH

ITEM	Part #	ZS NEW PART#	ZS OLD PART#	Description	Quantity
1	3090047	100202831	22000-JG03-0100	CLUTCH ASSY	1
2	3090054	100203082	22403-JG03-0000	PUSHING ROD, CLUTCH	1
3	3090048	100103354	22104-JG03-0000	SLEEVE,CLUTCH	1
4	3200046	100010669	92102-00000006003	BEARING 6003	1
5	3090049	100011533-0005	B16674A006002270X	BOLT M6×22	4
6	3090055	100202938	22121-JG03-0000	END COVER,CLUTCH	1
8	3090056	100301321	22105-IH26-0000	CENTER SLEEVE CLUTCH	1
9	3090050	100203033	22214-I006-0100	DRIVE FRICTION DISK	2
10	3090051	100203061	22215-JG03-0000	OUTER FRICTION DISK A	4
12	3090057	100103342	22002-JG03-0000	WASHER	1
13	3090058	100202996	22150-JG03-0100	OUT CASE ASSEMBLY,CLUTCH	1

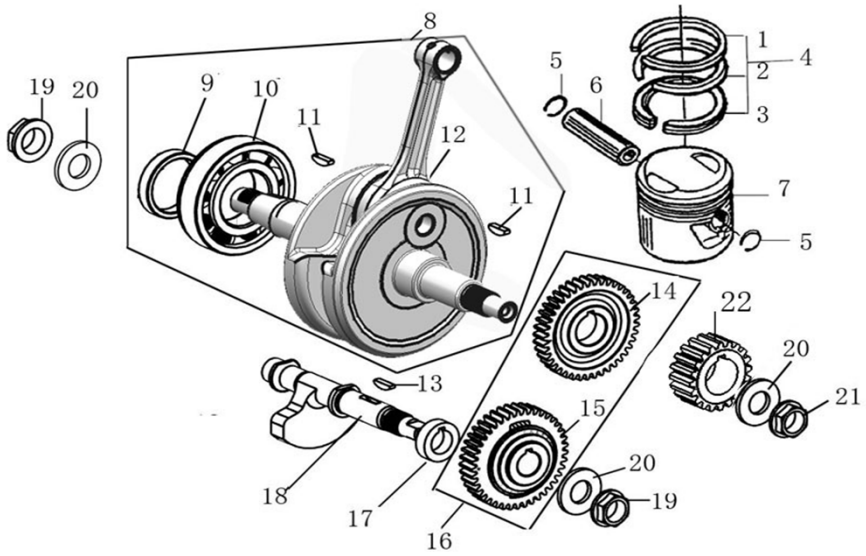

E04 = CRANKSHAFT CONNECTING-ROD ASSY/PISTON

ITEM	Part #	ZS NEW PART#	ZS OLD PART#	Description	Quantity
4	3033053	100101607	1310A-IA40-0000	PISTON RING COMP	1
5	3031026	100100580	91401-D002-0000	CLIP, PISTON PIN	2
6	3031027	100101503	13102-D002-0000	PIN PISTON	1
7	3030027	100101400	13101-IH26-0000	PISTON	1
8	3032029	100108467	1320B-IH26-0000	CRANKSHAFT CONNECTING-ROD ASSY	1
9	3032031	100103572	23206-JG03-0000	CRANKSHAFT TUBE	1
10	3200050	100101138	92102-0TMT6207YA9	BEARING,(TMT6207YA9_P5CS20)	1
11	3032030	100100640	91601-D002-0100	SEMICIRCULAR KEY	2
16	3032032	100207255	13310-JG03-0000	DRIVE GEAR SET, BALANCE SHAFT	1
18	3032033	100102007	13301-IH26-0000	BALANCE SHAFT	1
19	3226029	100100545-0001	91213-JG03-00000X	NUT M14×1.25×11	1
20	3226030	100106364	93301-41452829000	WASHER 14.5×2.8×29	1

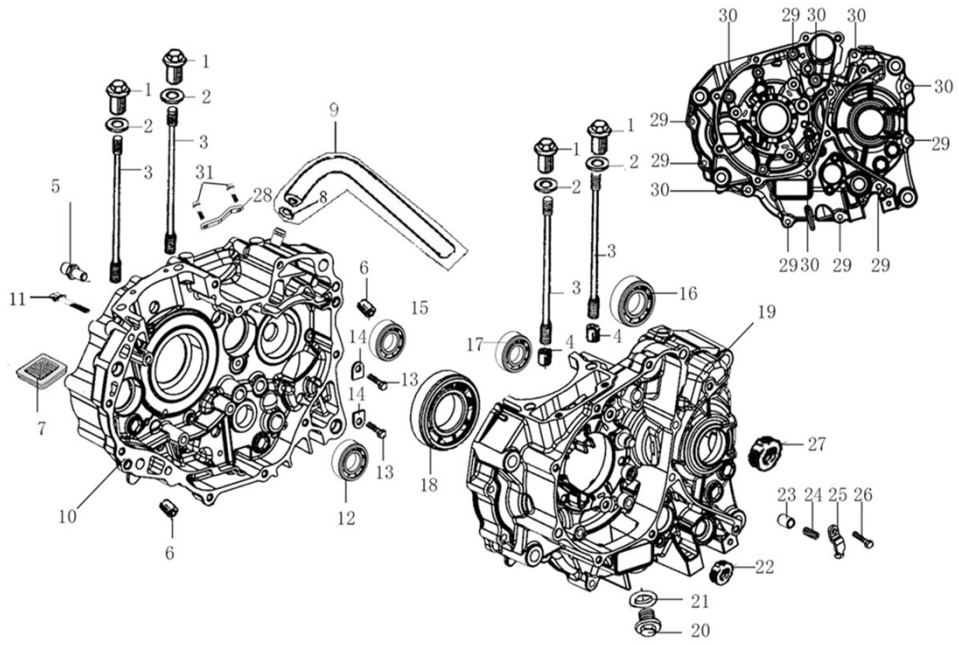

E05 = CRANKCASE

ITEM	Part #	ZS NEW PART#	ZS OLD PART#	Description	Quantity
7	3052030	100104941		STRAINER OIL FILTER	1
10	3061050	100052343-0004	1222B-JG03-000062	RIGHT CRANKCASE BLOCK	1
12	3200047	100101149	92102-10006203P63	BEARING,(6203_P63)	1
14	3170042	100053140	12121-IA40-0000	PRESSURE PLATE,BEARING	2
16	3200048	100101245	92102-00000TM6204	BEARING	1
18	3200049	100101111	92102-0063-28-X2H	BEARING,(63/28_X2H)	1
19	3061051	100052342-0004	1212B-JG03-000062	LEFT CRANKCASE BLOCK	1
20	3061048	100100331-0006	91103-I008-00000X	OIL DRAIN PLUG M12×1.5	1
21	3061049	100106548	93301-71212020000	WASHER,Φ12.1×2×Φ20	1
22	3212040	100104747		OIL SEAL Φ14×Φ22×5	1
23	3190045	100102998	12132-JG03-0000	PRESSING PIN BODY UPPER PIN	1
24	3190046	100103003	12133-JG03-0000	PRESSING PIN BODY SPRING	1
25	3190047	100053422	12136-JG03-0000	PRESSING PIN BODY STOP PLATE	1
27	3212041	100104703		OIL SEAL Φ20×Φ34×7	1

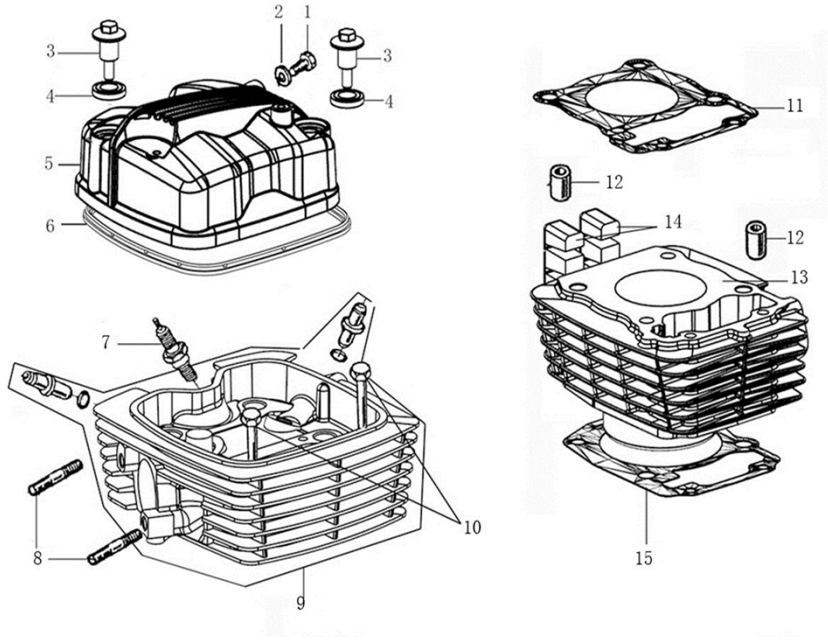

E06 = CYLINDER BLOCK & CYLINDER HEAD & COVERS

ITEM	LONGJIA Part #	ZS NEW PART#	ZS OLD PART#	Description	Quantity
3	3145016	100100407-0004	91119-JG03-00000X	BOLT	2
4	3011050	100208911	90250-I047-0000	GASKET 22×12	2
5	3011071	100205616-0004	11226-JG03-01006U	UPPER COVER CYLINDER HEAD MATT BL	1
6	3011052	100208447	90103-JG03-0000	SEAL RING OF UPPER COVER,CYLINDER H	1
7	3011053	100104154		SPARK PLUG	1
8	3145017	100100439-0002	91138-I008-04000X	BOLT M8×40	2
9	3011072	100057699-0013		CYLINDER HEAD ASSY MATT BLACK	1
11	3160107	100108521	9022B-IH26-0000	GASKET ASSY CYLINDER HEAD	1
13	3021040	100108432-0038		CYLINDER BLOCK ASSEMBLY MATT BLAC	1
15	3160108	100208589	90205-JG03-0000	GASKET,CYLINDER BLOCK	1

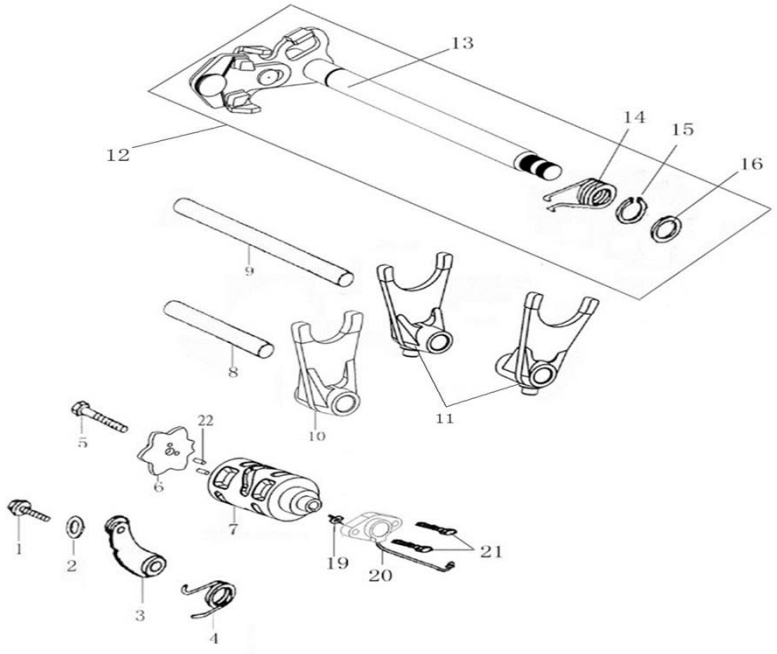

E07 = GE

ITEM	Part #	ZS NEW PART#	ZS OLD PART#	Description	Quantity
1	3100044	100100389		BOLT FIXING PLATE	1
2	3100045	100106373	93301-50621014000	WASHER 6.2×1×14	1
3	3100046	100203962	2434A-JG03-0000	LOCATING PLATE ASSY	1
4	3100047	100103986	24304-JG03-0100	SPRING ,LOCATING PLATE	1
6	3100048	100053426	24202-JG03-0000	STOPPING PLATE	1
7	3100049	100203796	24200-JG03-0000	GEARSHIFT DRUM COMP	1
8	3100050	100203759	24107-JG03-0000	SHAFT , GEARSHIFT FORK	1
9	3100051	100203761	24108-JG03-0000	GUIDE PIN, SELECTOR FORK CENTER	1
10	3100052	100203750	24106-JG03-0000	CENTER FORK, MAINSHAFT	1
11	3100053	100203722	24104-JG03-0000	RIGHT FORK, COUNTERSHAFT	2
12	3100054	100203888	24300-JG03-0000	GEARSHIFT SHAFT COMP	1
13	3100059	100203916	24301-JG03-0000	GEARSHIFT SHAFT COMP	1
14	3100055	100103972	24302-JG03-0000	SPRING, GEARSHIFT RETURN	1
19	3100057	100104487		CONTACT CEARINDICATION	1
20	3100058	100104500-0003	8803B-JG03-000055	GEARSHIFT SWITCH LAMP	1

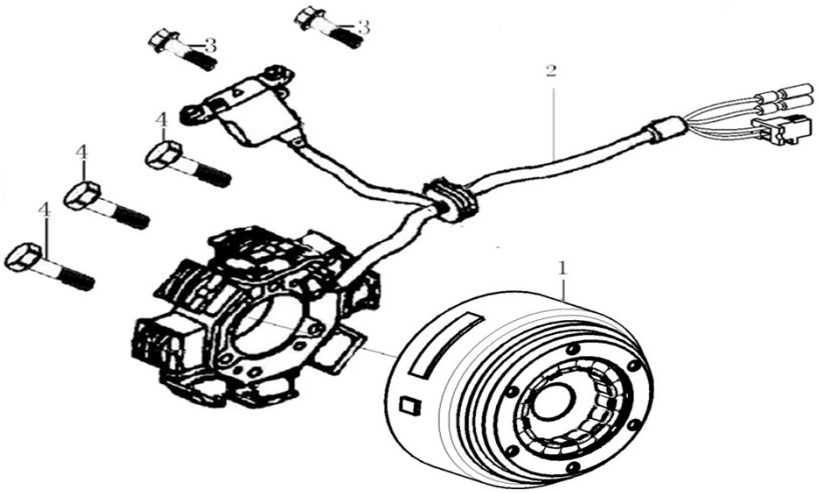

E08 = MAGNETO COMP

ITEM	Part #	ZS NEW PART#	ZS OLD PART#	Description	Quantity
1	3131020	100104214		ROTOR ASSY MAGNETO	1
2	3130035	100104186-0018		STATOR ASSY MAGNETO	1

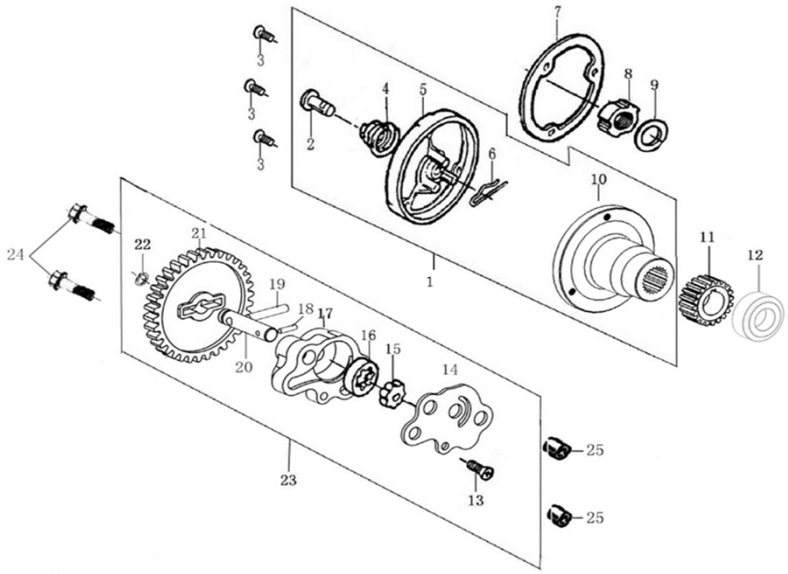

E09 = OIL PUMP/OIL FILTER

ITEM	Part #	ZS NEW PART#	ZS OLD PART#	Description	Quantity
1	3052029	100053714	14200-JG03-0000	OIL FILTER,COMP	1
7	3160112	100104599		GASKET OIL FILTER	1
8	3090059	100100514	91202-G011-0000	NUT, M14×1	1
11	3083047	100103496	23101-JG03-0000	PRIMARY DRIVE GEAR	1
12	3083046	100108493	23102-IH26-0000	AXLE SLEEVE	1
21	3051018	100100134		GEAR OIL PUMP	1
23	3050015	100100056		OIL PUMP ASSY	1

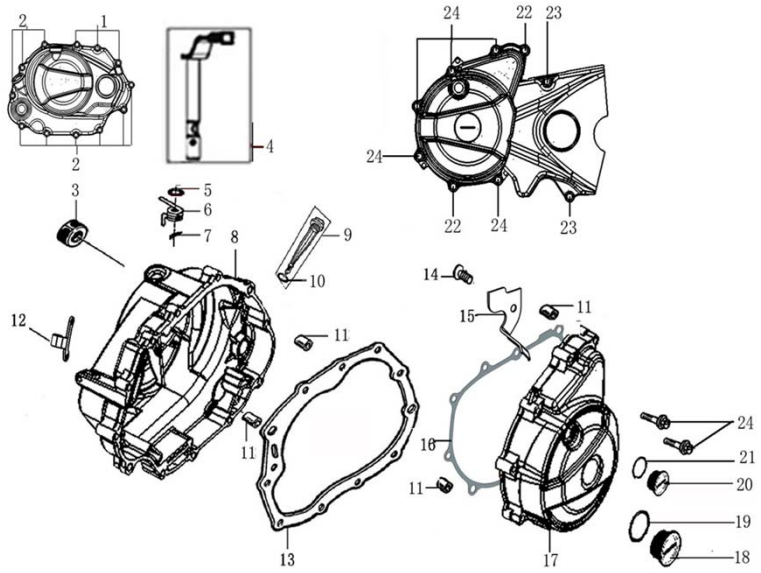

E10 = LIFE CRANKCASE COVER

ITEM	Part #	ZS NEW PART#	ZS OLD PART#	Description	Quantity
4	3090045	100203168-0004	2242A-JG03-01000X	LEVER ASSEMBLY, CLUTCH	1
5	3212039	100104759		OIL SEAL Φ12×Φ18×5	1
6	3090046	100103443	22427-I006-0000	SPRING, CONTROLLING ARM, CLUTCH	1
7	3090052	100100636-0001	91523-I006-00000E	UNCORK PIN 2×16	1
8	3063047			COVER COMP RIGHT CRANKCASE MATT B	1
9	3063034	100104882		OIL RULER ASSY	1
10	3210046	100031604		O-RING,Φ18×3	1
12	3090053	100078953-0002		HOLDER CLIUTCH CABLE BLACK	1
13	3160110	100208654	90206-JG03-0000	GASKET R.CRANKCASE COVER	1
16	3160111	100208524	90204-JG03-0000	GASKET L.CRANKCASE COVER	1
17	3060044			FRONT PART,L.CRANKCASE COVER MATT	1
18	3060037	100103062-0014	12304-G011-000062	DECORATE COVER, FRONT COVER	1
19	3210047	100107733	90101-30274000265	O-RING 27.4×2.65	1
20	3060035	100103059-0015	12303-G011-000062	CAP, SMALL VIEW HOLE	1
21	3210048	100010118	90101-30132000265	O-RING 13.2×2.65	1

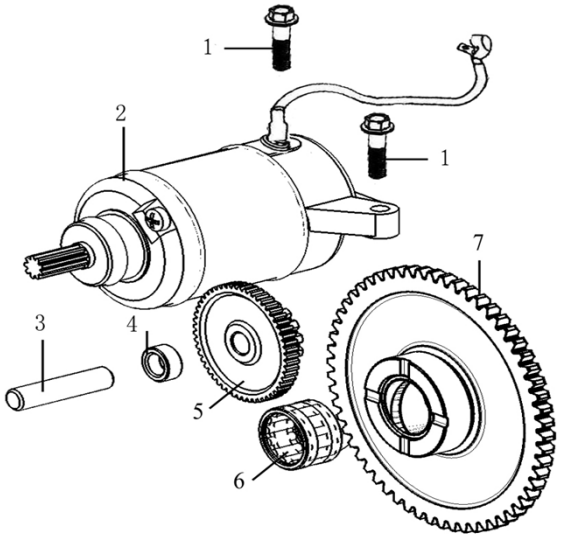

E11 = STARTING MOTOR

ITEM	Part #	ZS NEW PART#	ZS OLD PART#	Description	Quantity
3120020	2	100077211-0001		STARTING MOTOR ASSY MATT BLACK	1
3121008	3	100053424	21402-JG03-0000	SHAFT,REDUCTION	1
3121009	4	100103244	21403-JG03-0000	REDUCTION SHAFT SLEEVE	1
3121010	5	100053425	21421-JG03-0000	TWIN GEAR, SET	1
3201010	6	100101017	92102-0000K222917	BEARING K22×29×17	1
3123016	7	100202731	2142A-JG03-0100	DRIVING GEAR STARTING	1

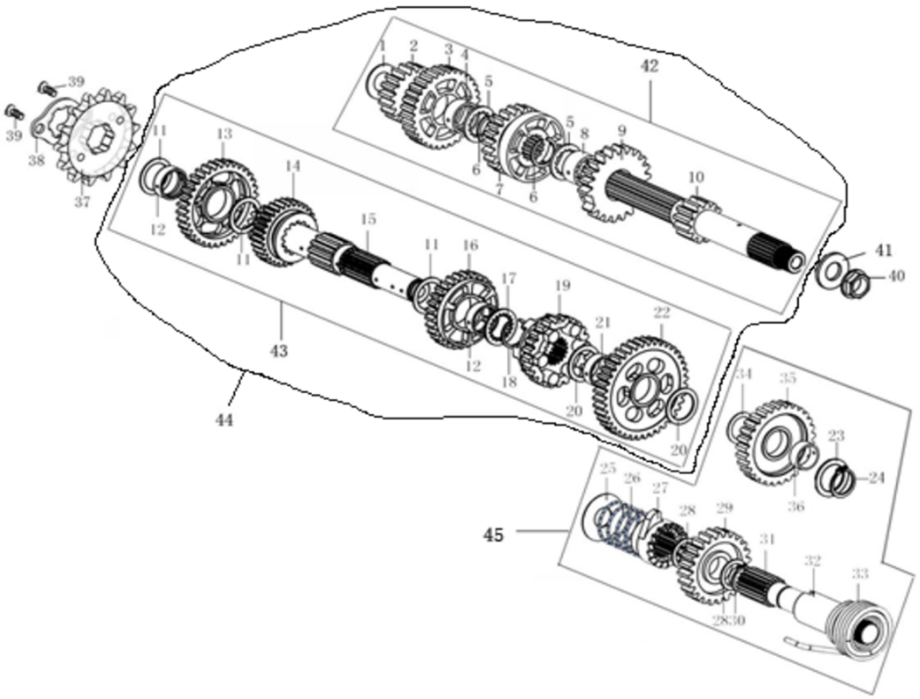

E12 = TRANSMISSION MECHANISM

ITEM	Part #	ZS NEW PART#	ZS OLD PART#	Description	Quantity
3083044	37	100103819-0002		DRIVE SPROCKET 428.14	1
3083045	38	100103850	23402-I006-0000	FIXING PLATE,DRIVE SPROCKET	1
3230623	39	100031911-0004	B057830006001020X	BOLT M6×10	2
3226030	40	100106364	93301-41452829000	WASHER 14.5×2.8×29	1
3090060	41	100053886	91202-JG03-0100	LOCK NUT, CLUTCH M14×1×9(2#)	1
3083048	42	100103578	23220-JG03-0000	MAIN SHAFT, TRANSMISSION	1
3083049	43	100203548	23240-JG03-0000	COUTERSHAFT TRANSMISSION	1
3083051	44	100203328	23200-JG03-0000	MAIN COUNTER SHAFT ASSY	1